HSK063A Shrink Fit - Metric



Features

- 3 µm - 0.0001" Runout Taper to Bore
- Manufactured from ISO-40CrMoV5 (H13) Material, Heat Treated for Optimum Elasticity and Tool Life
- X Jet-Blast Pluggable Coolant Ports
- Dynamically Balanced for G2.5 @ 25,000 RPM or < 1 gmm
- Preset Screw included for 1/4" & larger for positive stop
- **Designed for Carbide Cutting Tools with h6 shank tolerance**

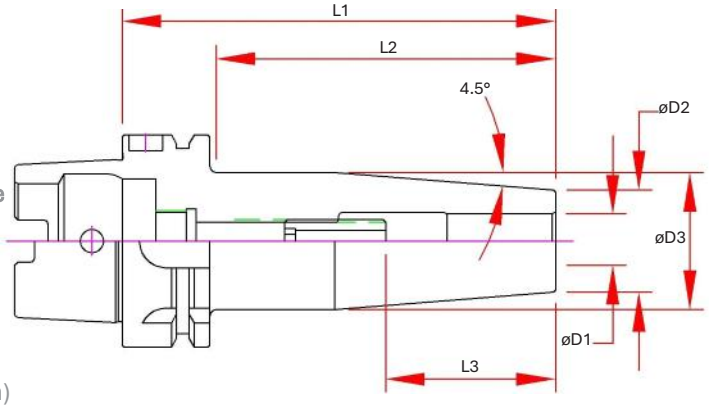

Optional (Order Separately):

- Fine Trim Balance
  (Sample cutter required for balance compensation)


P-84

Note: 120mm, 130mm & 200mm in normally in stock in Germany

Part Number	D1 Bore	D2	D3	L1 Projection	L2	L3 Max Tool Enters	Preset Screw
HSK063A-SDM03-080X	3.000	0.39	0.71	3.15	2.02	2.28	-
HSK063A-SDM03-160X	3.000	0.39	0.75	6.30	5.16	5.43	-
HSK063A-SDM04-080X	4.000	0.39	0.71	3.15	2.02	2.28	-
HSK063A-SDM04-160X	4.000	0.39	0.75	6.30	5.16	5.43	-
HSK063A-SDM06-080X	6.000	0.83	1.06	3.15	2.02	1.54	SCW-ASC-05-23
HSK063A-SDM06-160X	6.000	0.83	1.06	6.30	5.16	1.54	SCW-ASC-05-23
HSK063A-SDM08-080X	8.000	0.83	1.06	3.15	2.02	1.54	SCW-ASC-06-23
HSK063A-SDM08-160X	8.000	0.83	1.06	6.30	5.16	1.54	SCW-ASC-06-23
HSK063A-SDM10-085X	10.000	0.94	1.26	3.35	2.21	1.73	SCW-ASC-08-23
HSK063A-SDM10-160X	10.000	0.94	1.26	6.30	5.16	1.73	SCW-ASC-08-23
HSK063A-SDM12-090X	12.000	0.94	1.26	3.54	2.41	1.97	SCW-ASC-10-23
HSK063A-SDM12-160X	12.000	0.94	1.26	6.30	5.16	1.97	SCW-ASC-10-23
HSK063A-SDM16-095X	16.000	1.06	1.34	3.74	2.61	1.97	SCW-ASC-12-23
HSK063A-SDM16-160X	16.000	1.06	1.34	6.30	5.16	1.97	SCW-ASC-12-23
HSK063A-SDM20-100X	20.000	1.30	1.65	3.94	2.80	2.17	SCW-ASC-12-23
HSK063A-SDM20-160X	20.000	1.30	1.65	6.30	5.16	2.17	SCW-ASC-12-23
HSK063A-SDM25-115X	25.000	1.73	2.09	4.53	3.50	2.40	SCW-ASC-16-23
HSK063A-SDM25-160X	25.000	1.73	2.09	6.30	5.16	2.40	SCW-ASC-16-23